SECTIONAL VIEWS - THIRD ANGLE ORTHOGRAPHIC DRAWING

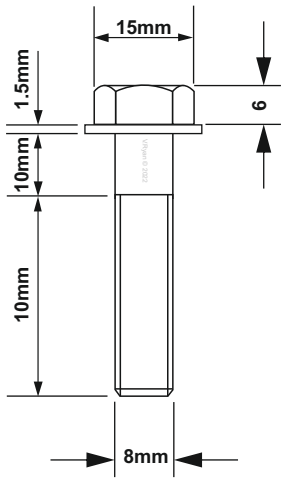

DRAW THE SECTIONAL FRONT VIEW, SIDE AND PLAN VIEWS OF THE BLOCK AND BOLT. FOLLOW THE DIMENSIONS SHOWN BELOW. WHERE NECESSARY, ESTIMATE MEASUREMENTS.

ADD SIX DIMENSIONS TO YOUR COMPLETED ORTHOGRAPHIC DRAWING

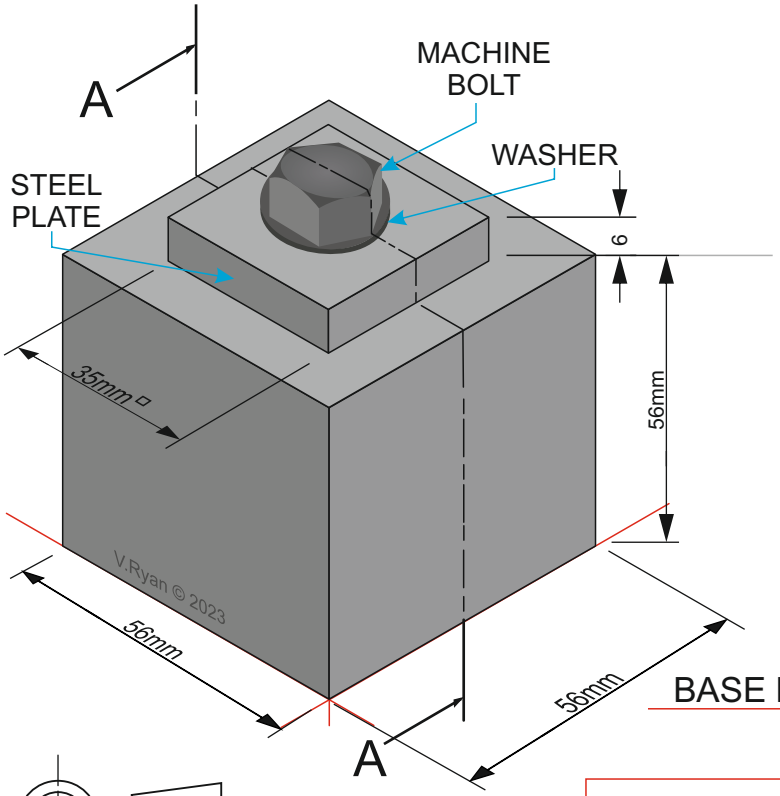

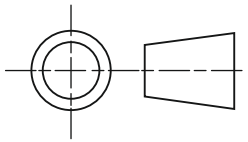

THIRD ANGLE PROJECTION

HELPFUL LINK: https://technologystudent.com/despro_3/sectional4.html

HELPFUL LINK