VICE BENCH CLAMP / TABLE VICE - EXAMINATION QUESTIONS

WORLD ASSOCIATION OF TECHNOLOGY TEACHERS https://www.facebook.com/groups/254963448192823/ www.technologystudent.com © 2024 V.Ryan © 2024

HELPFUL LINK: https://www.technologystudent.com/equip_flsh/clampvice1.html

1. Complete the diagram of the Vice Bench Clamp, by adding the labels as identified by the arrows. ***10 marks***

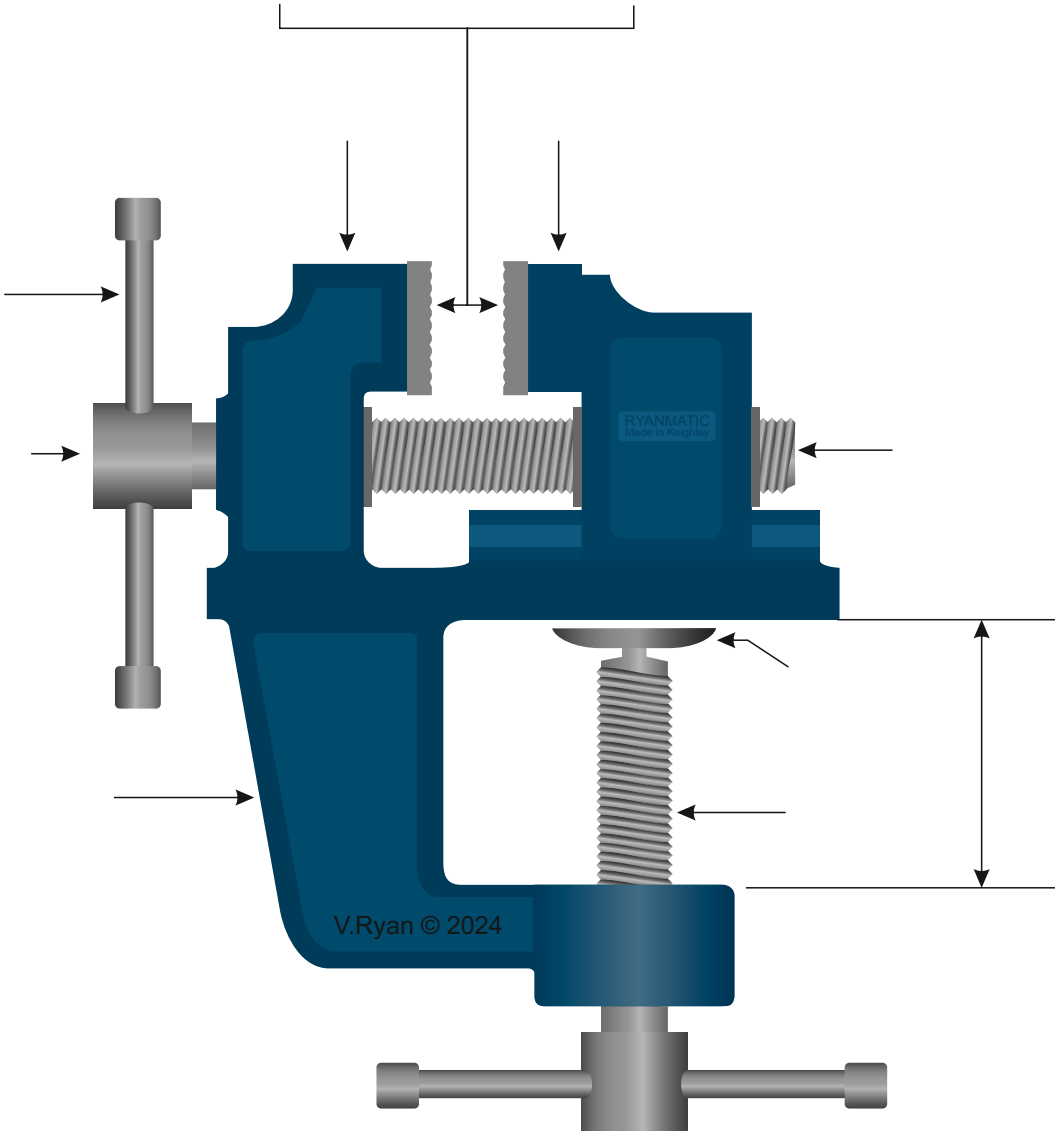

2. Describe two typical uses of this type of vice. ***4 marks***

A: _____

_____

_____

B: _____

_____

_____